BEVERAGE-AIR

Project: _____	AIA#
Item: _____	
Location: _____	SIS#
Approved:	

FOOD PREPARATION SERIES

DP46HC Deli/Pizza One Door Prep Table
Hydrocarbon Series

MODEL:
DP46HC

3 Year Parts/Labor Warranty
Additional 4 Year Compressor Warranty

CABINET CONSTRUCTION

- Stainless steel front, sides, top, door, and grille (galvanized back & bottom)
- Interior liner is made of corrosion resistant aluminum
- Aluminum top interior liner prevents spill from falling into cabinet
- Stainless steel top
- Removable hoods and insulated lid assemblies are made of matching stainless steel
- Self-closing door with 120˚ stay-open feature, on lift-off hinges
- Snap-in door gaskets
- Easy lift-off door removal for service and cleaning
- Field reversible door
- 3” Casters, 2 with brakes standard
- 19” Wide reversible cutting board constructed of white polyethylene plastic
- Cutting board removable for cleaning
- Two (2) epoxy-coated steel wire shelves
- Units will accept pans up to 6” deep (pans are not included)

OPTIONS & ACCESSORIES

- Stainless steel back
- Stainless steel interior
- Clear-lid models
- Combination door/drawer models
- Overshelf kits
- Additional shelves
- Shelf clips
- Pan support
- 6” Casters or 6” legs
- Door locks
- Composite cutting board
- Thermometer
- Night cover
- Bun tray rack
- 6” Casters
- 6” Legs black or seismic/flanged
- Remote option* (see note on back page)

REFRIGERATION SYSTEM

- Uses environmentally friendly, energy efficient R290 refrigerant, and meets all regulatory requirements for CARB, SNAP, DOE & more
- Adaptive defrost
- Epoxy coated evaporator coil
- Raised rail maintains temperatures between 36º - 38ºF

Please verify qualifying units by visiting:
www.energystar.gov/cfs

3779 Champion Blvd., Winston-Salem, NC 27105
1-888-845-9800 Fax: 1-336-245-6453
Beverage-Air.com Sales@bevair.com

BEVERAGE-AIR

Deli/Pizza Preparation Table
Model: DP46HC

MODEL	DP46HC
EXTERNAL DIMENSIONAL DATA	
Width Overall	46”
Depth Overall with Cutting Board	36 7/8”
Height Overall with Casters & Lid Open	53 1/8”
Number Doors	1
Depth with Door Open 90°	55 1/4”
Door Opening	21 5/8” x 23 1/2”
Depth, Cutting Board	19”
INTERNAL DIMENSIONAL DATA	
NET Capacity (cubic ft.)	12.0
Internal Width Overall (in)	21 7/8”
Internal Depth Overall (in)	26”
Internal Height Usable (in)	23 7/8”
No. of Shelves	2
ELECTRICAL DATA	
Full Load Amperes	4.5
REFRIGERATION DATA	
Horsepower	1/2
Capacity (BTU/Hr)	2940
SHIPPING DATA	
Gross Weight - Crated	336 lbs
Height - Crated	48”
Width - Crated	49”
Depth - Crated	37”

*NOTE: Remote units are field wired and come with 6” legs.
Refrigerant must be specified at time of order.

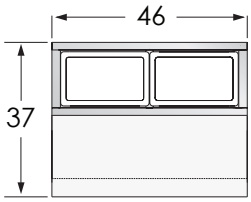

Top Configuration

Model Views

Required Clearance: Rear 2”

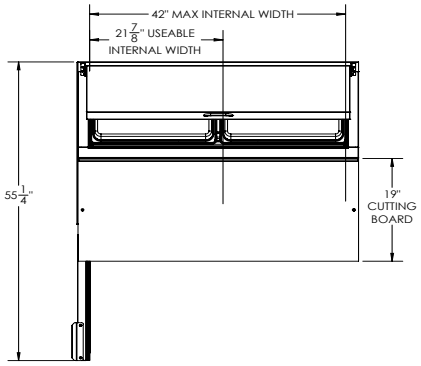

PLAN VIEW

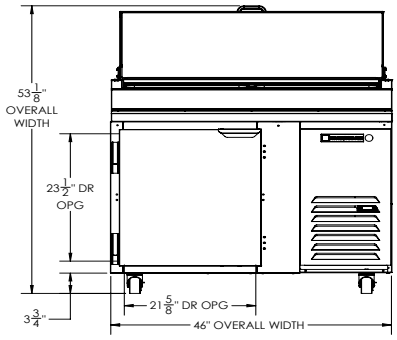

ELEVATION VIEW

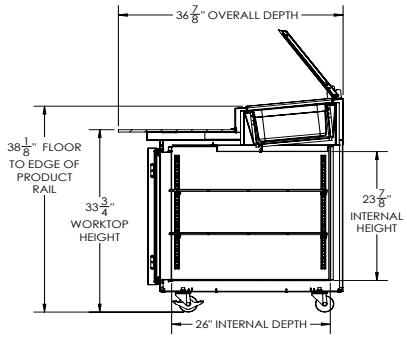

SIDE VIEW

*ELECTRICAL CONNECTION

115/60/1
NEMA 5-15P

Units pre-wired at factory and include 8’ long cord and plug set.

3779 Champion Blvd., Winston-Salem, NC 27105 1-888-845-9800 Fax: 1-336-245-6453 Beverage-Air.com Sales@bevair.com

an Ali Group Company

GROUP
The Spirit of Excellence